ISSN 2395-1621

Design Development and Analysis of Dual Mode Bicycle

#1Jyoti A. Durgude, #2Mr.Gawade S.R.

1tilekarjs@gmail.com
2sg212001@yahoo.com

#12Mechanical Engineering, University Of Pune,
DGOI, COE Swami Chincholi, Daund, Pune,India

ABSTRACT

a conventionally the bi-cycle was primarily used to commute, i.e. to move from one place to other, whereas now a day's cycling has taken up additional use in exercising,and sport.Conventional bi-cycles employ the chain drive to transmit power from the pedal arrangement to the wheel .Chain focused bi-cycle requires accurate mounting & alignment for proper working. Least miss-alignment will result in chain dropping. More over the chain drive is not efficient.The concept of shaft driven bicycles can be introduced due to highly developed gear manufacturing technology. The 'chainless' drive system helps to transfer torque from the pedals to the rear wheel. Shaft driven bicycle is remarkable in look compare with chain focused bicycle. This Project introduces design and simulation of dual mode bicycle with shaft drive that shall serve both purpose of commute and exercise. CAD models of designed parts are created UG-Nx, Finite element based solver ANSYS is used for structural analysis of the shaft and gears. Test and trial to differentiate the findings of exercising and trek mode is part of this project.Initial work contains calculation of energy spent in exercise mode to calorie burn and calculation of energy saved in travel mode. Mathematical model of pedal arrangement system, spiral bevel gear selection for finestpower transmission capacity is used.Mathematical model of system of forces is developed by derivation and resolution of system forces using free bodydiagram of linkage.Finding forces and determine the linkage dimensions of most important parts of drive design. CAD modellingiscompleted using UG Nx-8.0 CAD software. FE based simulations of critical component are completed using ANSYS Work-bench 14.5. The experimental validation is done for the part of reduced pedal effort developed by the modified mechanism in comparison to the conventional chain arrangement by theoretical derivation©2013 IJRSD. All rights reserved

Keywords— **a Shaft drive, dual mode, 2-D CAD, 3-D Modelling, ANSYS software**

ARTICLE INFO

Article History

Received :18th November 2015

Received in revised form :

19th November 2015

Accepted : 21st November , 2015

Published online :

22nd November 2015

I. INTRODUCTION

The first shaft drives for bicycle was invented separately in 1890 in United States & England. In those days manufacturing of bevel gears was not so precise and cost effective; therefore itwas not possible to replace chain drive by shaft driven gear system. In shaft drive at both ends of shaft pair of spiral gears is used.Most familiar application of the spiral bevel gear is in anautomobile differential, in which the direction of drive from the drive shaft must be turned 90 degrees to drive the wheels of the vehicle. The helical gears are better from noise and vibration point of view than conventional straight cut or spur cut gear with straight teeth. The shaft drive bicycle has more efficiency than conventional chain drive bicycle.

There is limitation on the maximum speed attained as the maximum speed attainable cannot exceed 1100 rpm. More over the application of chain drive leads to underutilization of human effort due to the fact the maximum transmission of bi-cycle chain remains below 70 per cent due to polygon effect in chain sprocket drives. Thus there is a need to replace the conventional chain drive using the spiral bevel gear arrangement. Motion is transmitted from pedal to wheel through four speed inline gear box with sliding mesh gear. Gears can be easily shifted by using thumb shifter near brake lever. This Project introduces Design Development and Analysis of dual mode bicycle with shaft drive that shall serve both purpose of commute and exercise. Mode 1: Exercising mode (Gear 1 & 2) designed to give minimum distance travelled in maximum pedalling. Mode 2: Commutation/travel mode (Gear 3 & 4)

designed to give maximum distance travelled in minimum pedalling. It include design of kinematic linkage for pedal arrangement, gear box to produce a driving force to carry the given system load.2D drawing preparation of linkage mechanism is completed by 'kinematic overlay method 'using Auto-CAD. Mathematical model is developed for system of forces. Forces acting on different parts are determined and utilized to find optimum gear dimensions for operation in dual mode i.e. the exercise mode and the travel mode. Mechanical design of critical components is done by using theoretical theories of failure. After selection of appropriate materials 3-D modelling of set-up using unigraphix Nx-8.0 is done. CAE of critical component Such as Bi-cycle frame, Seat system, Pedal linkage, Pedal shaft, Drive shaft etc. and meshing using ANSYS software is completed. Experimental validation of the transmission efficiency for the drive is done by using brake Dynamometer test and optimization of the effort application in both mode of bicycle. The experimental validation is done for the part of the pedal force developed by the modified Mechanism in comparison to the conventional chain arrangement by theoretical derivation.

Dual mode bicycle:

Fig. 1: Pictorial representation of dual mode bicycle

Ease of maintenance is kept in mind while designing the layout of components. Layout is designed in such a way that easy servicing is possible especially those components which required frequent servicing can be easily disassembled. Mechanical design phase is very important from the view of designer. As whole success of the project depends on the correct deign analysis of the problem. Designer should have adequate knowledge about physical properties of material, loads stresses, deformation, and failure. Theories and wear analysis, Identification of the external and internal forces acting on the machine parts. Motion is transmitted from pedal to wheel through 4-speed inline gear box with sliding mesh gear. When gear is mesh in 1 and 2 gears then bicycle is in exercising mode, where as in 3 and 4 then bicycle is in travelling mode. Simple technic is used to shift sliding mesh four speed gear box to achieve required Mode of transmission. Thumb shifter near break lever is used to shift sliding mesh four speed gearboxes.

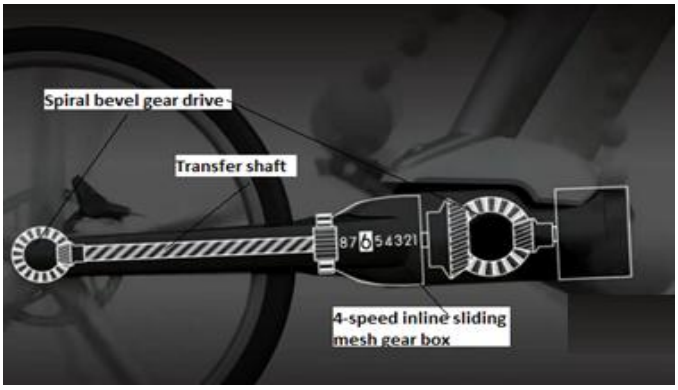

Fig.2: Four Speed Inline Gear box

1. **Salient Features:**
   Spiral bevel gear drive from pedal to wheel➔ Shaft Drive
   2.1. Dual mode:
   Mode 1: Exercising mode (Gear 1 & 2) designed such that heart rate is maintained between 125 to 140 bpm, formaximum calorie burn.
   Mode 2: Commutation/travel mode (Gear 3 & 4) designed to give maximum distance travelled in minimum pedalling
   2.2. Easy shift sliding mesh four speed gearbox, simple logic selection (either / or technique using thumb shifter close to lever used to apply brake).

II. LITERATURE SURVEY

aIn a shaft driven bicycle, a drive shaft is used instead of a chain to transmit power from the pedals to the wheel. The drive shafts are carries of torque. The steel drive shaft satisfies three design specifications such as torque transmission capability, buckling torque capability & natural frequency in bending mode. The both end of the shaft are fitted with the bevel pinion, the bevel pinion engaged with the crown & power is transmitted to the rear wheel through the propeller shaft & gear box. The design of suitable propeller shaft and replacement of chain drive smoothly to transmit power from the pedal to the wheel without slip. Shaft drive increases the power transmission efficiency

III.DESIGN METHODOLOGY

A Systematic approach is adopted to design a special purpose machine by dividing design work in two parts:

1. System design
2. Mechanical design

System design focuses on the variousphysical constraints, ergonomics space requirements, arrangement of various components on the main frame of machine,number of controls and position of these controls. Ease of maintenance and scope of further improvement is considered in system design. Weight of system and position of centre of gravity from ground have given special attention in system design approach.

Mechanical design has components of two categories.

1. Design parts
2. Parts to be purchased.

For design parts detailed design calculations are carried out to find optimum dimensions.Calculated optimum

dimensions are compared to next highest dimension, readily available in market.This approach simplifies the assembly efforts as well as post production servicing difficulties. Process charts are prepared by adding manufacturing drawings with tolerance specifications and passed on to the manufacturing stage.The components to be purchased directly are identified and selected from standard catalogues.

1. Mechanical Design

Mechanical design phase is very important from the view of designer as whole success of the project depends on the correct deign analysis of the problem. Many preliminary alternatives are eliminated during this phase. Designer should have adequate knowledge above physical properties of material, loads stresses, deformation, and failure. Theories and wear analysis, He should identify the external and internal forces acting on the machine parts.

These forces may be classified as:

a) Dead weight forces
b) Friction forces
c) Inertia forces
d) Centrifugal forces
e) Forces generated during power transmission etc.

Designer should estimate these forces very accurately by using design equations .If he does not have sufficient information to estimate them he should make certain practical assumptions based on similar conditions which will almost satisfy the functional needs. Assumptions must always be on the safer side. Selection of factors of safety to find working or design stress is another important step in design of working dimensions of machine elements. The correction in the theoretical stress values are to be made according in the kind of loads, shape of parts & service requirements. Selection of material should be made according to the condition of loading shapes of products environment conditions & desirable properties of material. Provision should be made to minimize nearly adopting proper lubrications methods.

A. Design of Link

Material Selection:-

Ref: - PSG (1.10 & 1.12) + (1.17)

Designation	Ultimate Tensile Strength $\sigma_{ut}(N/mm^2)$	Yield Strength $\sigma_{yt}(N/mm^2)$
EN9	650	480

Table 1 ASME code for design of link

Cross section of link may be determined by considering lever in bending

The linkage has a section of (25 mm x10 mm)

Let;

$t = thickness\ of\ the\ link$

$B = Width\ of\ the\ link$

Bending moment can be calculated as below:

$$Z\ is\ section\ modulus$$

$$Z = \frac{1}{6} t\, B^2$$

$$\sigma_b = \frac{PL}{Z}$$

Where, P = Maximum Effort applied by hand

L = Length of Link

$$\sigma_b = \frac{6PL}{tB^2}$$

Maximum effort applied by hand (P) = 200 N and L=120 mm

Therefore,

$$\sigma_{b\ actual} = \frac{6 \times 200 \times 120}{10 \times 25^2}$$

$$\sigma_{b\ actual} = 23.02\ N/mm^2$$

As $\sigma_{b\ actual} < \sigma_{b\ all}$

Link with cross section $(25 \times 10)mm^2$ is selected

B. Design of Pedal Shaft

Material Selection:

Ref: - PSG (1.10 & 1.12) + (1.17)

Designation	Ultimate Tensile Strength $\sigma_{ut}(N/mm^2)$	Yield Strength $\sigma_{yt}(N/mm^2)$
EN24	800	680

Table 2 ASME code for design of shaft

As loads on most shafts in connected machinery are not constant, it is extremely important to make proper allowance to avoid the harmful effects of load fluctuations. According to ASME code permissible values of shear stress can be calculated form various relations

$$\tau_{max} = 0.18\ \sigma_{ut}$$

Where, $\tau_{max} = Maximum\ shear\ stress$

$\sigma_{ut} = Ultimate\ tensile\ strength$

$\tau_{max} = 0.18 \times 800$

$\tau_{max} = 144\ N/mm^2$

OR

$\tau_{max} = 0.3\ \sigma_{yt}$

Whecxvre, $\tau_{max} = Maximum\ shear\ stress$

$\sigma_{yt} = Yield\ strength$

$\tau_{max} = 0.3 \times 680$

$\tau_{max} = 204\ N/mm^2$

Considering minimum of the above values

$$\tau_{max} = 144\ N/mm^2$$

Shaft is provided with key way; this will reduce its strength. Hence reducing above value of allowable stress by 25%

$\tau_{max} = 108\ N/mm^2$

This is the allowable shear stress limit of the shaft material for safe operation.

Torque at the pedal shaft is 200 x120 =2400Nmm

$T_{design} = 2.4\ Nm$

Check for torsional shear failure of shaft:

Assuming $d = 14\ mm$

Where 'd' is minimum section diameter on input shaft.This dimension is the smallest section of the main shaft where the load plate is mounted. Therefore manufacturing consideration,

$$T_{design} = \frac{\pi}{16} d^3 \tau_{act}$$

$$\tau_{act} = \frac{16 \times 2.4 \times 10^3}{\pi \times 14^3}$$

$$\tau_{act} = 4.45\ N/mm^2$$

As $\tau_{act} < \tau_{max}$, input shaft is safe under torsional load.

C. Design of Gear Box

Conservative approach is adopted to design a **GEAR BOX.** While designing parts detailed design calculations are carried out and compared to next highest dimension readily available in market. This approach simplifies the assembly process and post production servicing work. The various tolerances on components are specified in the manufacturing drawings. The process charts are prepared and passed on to the manufacturing stage.The parts to be purchased directly are identified and selected from standard catalogues.

Design torque is modified by adding safety factor 1.25,

$T_{design} = 1.25 \times 2.4\ Nm$

$T_{design} = 3.0\ Nm$

Check fortorsionalshearfailureofshaft:

Assuming $d = 16\ mm$

Where 'd' is minimum section diameter on input shaft, as the pulley is to be mounted on shaft and minimum bore size that can be machined with dimensional tolerances is 16mm.

$$T_{design} = \frac{\pi}{16} \times d^3 \times \tau_{act}$$

$$\tau_{act} = \frac{16 \times T_{design}}{\pi \times d^3}$$

$$\tau_{act} = \frac{16 \times 3 \times 10^3}{\pi \times 16^3}$$

$$\tau_{act} = 3.73\ N/mm^2$$

As $\tau_{act} < \tau_{max}$, I/P shaft is safe under torsional load.

D. Design of spline

Material of Shaft EN24

$\sigma_{ut} = 800\ N/mm^2 \& \sigma_{yt} = 680\ N/mm^2$

$\tau_{max} = 108\ N/mm^2$

$D = Major\ daimeter\ of\ spline = 29\ mm$

$d = Minor\ daimeter\ of\ spline = 20\ mm$

$L = Length\ of\ hub = 30\ mm$

$n = Number\ of\ splines = 10$

Torque transmission capacity of spines is given by:

$$T_{capacity} = \frac{1}{8} p_m Ln(D^2 - d^2)$$

$p_m = permissible\ pressure\ in\ splines = 6.5\ N/mm^2$

$$T_{capacity} = \frac{1}{8} \times 6.5 \times 30 \times 10 \times (29^2 - 20^2)$$

$T_{capacity} = 107.5\ \times 10^3\ N/mm^2$

$T_{capacity} = 107.5\ \times N/m^2$

As $T_{capacity} < T_{design}$, spline design on shaft is safe under torsional load.

Design ofoutputspline shaft:

As loads on most of the rotating shafts in connected machinery are not constant, it is important take proper measures to compensate fluctuations by adding suitable allowances.

According to ASME code permissible values of shear stress may be calculated form various relations.

$$\tau_{max} = 0.18\ \sigma_{ut}$$

Where, $\tau_{max} = Maximum\ shear\ stress$

$\sigma_{ut} = Ultimate\ tensile\ strength$

$\tau_{max} = 0.18\ \times 800$

$\tau_{max} = 144\ N/mm^2$

OR

$\tau_{max} = 0.3\ \sigma_{yt}$

Where, $\tau_{max} = Maximum\ shear\ stress$

$\sigma_{yt} = Yield\ strength$

$\tau_{max} = 0.3\ \times 680$

$\tau_{max} = 204\ N/mm^2$

Considering minimum of the above values

$$\tau_{max} = 144\ N/mm^2$$

Shaft is provided with key way; this will reduce its strength. Hence reducing above value of allowable stress by 25%

$\tau_{max} = 108\ N/mm^2$

This is the allowable value of shear stress that can be induced in the shaft material for safe operation.

Calculation of worm wheel shaft torque

$$Power\ (P) = \frac{2\pi NT}{60}$$

Motor is 50 watt power, run at 1000 rpm, connected to Spline shaft by open belt drive reduction ratio 1:5

$$T = \frac{60 \times P}{2 \times \pi \times N}$$

$$T = \frac{60 \times 50}{2 \times \pi \times 1000}$$

$T = 0.47\ Nm$

$Torque\ at\ input\ shaft\ 0.47\ \times 5 = 2.35\ Nm$

Considering 25% overload,

$T_{design} = 1.25 \times 2.35 = 2.93\ \approx 3\ Nm$

Check for torsional shear failure of shaft:

Assuming $d = 16\ mm$

Where 'd' is minimum section diameter on input shaft, as the pulley is to be mounted on shaft and minimum bore size that can be machined with dimensional tolerances is 16mm.

$$T_{design} = \frac{\pi}{16} \times d^3 \times \tau_{act}$$

$$\tau_{act} = \frac{16 \times T_{design}}{\pi \times d^3}$$

$$\tau_{act} = \frac{16 \times 3 \times 10^3}{\pi \times 16^3}$$

$\tau_{act} = 3.73\ N/mm^2$

As $\tau_{act} < \tau_{max}$, input shaft is safe under torsional load.

E. Design of spur gear pair for first gear

$Power\ = \frac{1}{15} HP = 50\ watt$

$Speed\ = 200\ rpm$

$F = Face\ width\ of\ gear\ in\ mm\ = 10\ m,$

Where m is module

$T_{design}\ = 3\ Nm = 3000\ Nmm$

$\sigma_{ut\ pinion}\ = \sigma_{ut\ gear} = 400\ N/mm^2$

$Service\ Factor\ (C_s)\ = 1.5$

Gear pair:

$Number\ of\ teeth\ on\ Gear_1 = 11$

$Number\ of\ teeth\ on\ Gear_2 = 35$

$Pitch\ Daimeter\ (d_p) = 16.5\ mm$

$T = T_{design}\ = 3000\ Nmm$

$$T = p_t \times \frac{d_p}{2}$$

$p_t = 363\ N$

$$p_{eff} = p_t \frac{C_s}{C_v}$$

As speed is low velocity factor (C_v) should be neglected,

$p_{eff} = 363 \times 1.5 = 544.5\ \approx 545\ N$ ---------- (A)

Lewis Strength equation,

$$W_t = \frac{S \times F \times Y}{D_p}$$

Where,

$W_t = Maximum\ transmitted\ load\ in\ N$

$S = Maximum\ bending\ tooth\ stress$

$(Normally\ considered\ {}^1/_3\ of\ tensile\ strength)$

$F = Face\ width\ of\ gear\ in\ mm$

$D_p = Daimeteral\ pitch\ = \frac{1}{module}$

$Y = Lewis\ Factor$

$$Y = 0.484\ - \frac{2.86}{Z}$$

$$Y = 0.484\ - \frac{2.86}{11} = 0.224$$

Pinion and gear both are of same material, so $S = 133.3\ N$

$$W_t = \frac{S \times F \times Y}{D_p}$$

$$W_t = \frac{133.3 \times 10m \times 0.224}{{}^1/_m}$$

$W_t = 133.3\ \times 10m^2 \times 0.224 = 298.67\ m^2$----------(B)

Equating equation (A) & (B)

$298.67\ \times m^2 = 545$

$m = 1.35$

Selecting standard module, $m = 1.5$

Gear Data:
Number of teeth on gear on main shaft=11
Number of teeth gear on countershaft =35
Module = 1.5 mm

F. Design of Spur Gear Pair for second gear

Gear pair:
$Number\ of\ teeth\ on\ Gear_1 = 17$
$Number\ of\ teeth\ on\ Gear_2 = 29$
$Pitch\ Daimeter\ (d_p) = 25.5\ mm$
$T = T_{design} = 3000\ Nmm$

$$T = p_t \times \frac{d_p}{2}$$

$p_t = 235\ N$
$p_{eff} = p_t \frac{C_s}{C_v}$
As speed is low velocity factor (C_v) should be neglected,
$p_{eff} = 235 \times 1.5 = 352.5 \approx 353\ N$ ---------- (A)
Lewis Strength equation,
$W_t = \frac{S \times F \times Y}{D_p}$
Where,
$W_t = Maximum\ transmitted\ load\ in\ N$
$S = Maximum\ bending\ tooth\ stress$
$(Normally\ considered\ {}^1/_3\ of\ tensile\ strength)$
$F = Face\ width\ of\ gear\ in\ mm$
$D_p = Daimeteral\ pitch = \frac{1}{module}$
$Y = Lewis\ Factor$
$Y = 0.484 - \frac{2.86}{Z}$
$Y = 0.484 - \frac{2.86}{17} = 0.315$
Pinion and gear both are of same material, so $S = 133.3\ N$
$W_t = \frac{S \times F \times Y}{D_p}$
$W_t = \frac{133.3 \times 10m \times 0.315}{{}^1/_m}$
$W_t = 133.3 \times 10m^2 \times 0.316 = 421.2\ m^2$ ---------- (B)
Equating equation (A) & (B)
$421.2 \times m^2 = 353$
$m = 0.91$
Selecting standard module, $m = 1.0$
Gear Data:
Number of teeth on gear on main shaft=17
Number of teeth gear on countershaft =29
Module = 1.0 mm

G. Design of Spur Gear Pair for third gear

Gear pair:
$Number\ of\ teeth\ on\ Gear_1 = 22$
$Number\ of\ teeth\ on\ Gear_2 = 26$
$Pitch\ Daimeter\ (d_p) = 32.96\ mm$
$T = T_{design} = 3000\ Nmm$

$$T = p_t \times \frac{d_p}{2}$$

$p_t = 182\ N$
$p_{eff} = p_t \frac{C_s}{C_v}$
As speed is low velocity factor (C_v) should be neglected,
$p_{eff} = 182 \times 1.5 = 273\ N$ ---------- (A)
Lewis Strength equation,
$W_t = \frac{S \times F \times Y}{D_p}$
Where,
$W_t = Maximum\ transmitted\ load\ in\ N$
$S = Maximum\ bending\ tooth\ stress$
$(Normally\ considered\ {}^1/_3\ of\ tensile\ strength)$
$F = Face\ width\ of\ gear\ in\ mm$
$D_p = Daimeteral\ pitch = \frac{1}{module}$
$Y = Lewis\ Factor$
$Y = 0.484 - \frac{2.86}{Z}$
$Y = 0.484 - \frac{2.86}{22} = 0.354$
Pinion and gear both are of same material, so $S = 133.3\ N$
$W_t = \frac{S \times F \times Y}{D_p}$
$W_t = \frac{133.3 \times 10m \times 0.354}{{}^1/_m}$
$W_t = 133.3 \times 10m^2 \times 0.354 = 471.88\ m^2$ ---------- (B)
Equating equation (A) & (B)
$471.88 \times m^2 = 273$
$m = 0.76$
Selecting standard module, $m = 1.0$
Gear Data:
Number of teeth on gear on main shaft=22
Number of teeth gear on countershaft =26
Module = 1.0 mm

H. Design of Spur Gear Pair for forth gear

Gear pair:
$Number\ of\ teeth\ on\ Gear_1 = 24$
$Number\ of\ teeth\ on\ Gear_2 = 22$
$Pitch\ Daimeter\ (d_p) = 36\ mm$
$T = T_{design} = 3000\ Nmm$

$$T = p_t \times \frac{d_p}{2}$$

$p_t = 167\ N$
$p_{eff} = p_t \frac{C_s}{C_v}$
As speed is low velocity factor (C_v) should be neglected,
$p_{eff} = 182 \times 1.5 = 250\ N$ ---------- (A)
Lewis Strength equation,
$W_t = \frac{S \times F \times Y}{D_p}$
Where,
$W_t = Maximum\ transmitted\ load\ in\ N$
$S = Maximum\ bending\ tooth\ stress$
$(Normally\ considered\ {}^1/_3\ of\ tensile\ strength)$
$F = Face\ width\ of\ gear\ in\ mm$
$D_p = Daimeteral\ pitch = \frac{1}{module}$
$Y = Lewis\ Factor$

$$Y = 0.484 - \frac{2.86}{Z}$$

$$Y = 0.484 - \frac{2.86}{24} = 0.364$$

Pinion and gear both are of same material, so $S = 133.3\ N$

$$W_t = \frac{S \times F \times Y}{D_p}$$

$$W_t = \frac{133.3 \times 10m \times 0.364}{1/m}$$

$W_t = 133.3 \times 10m^2 \times 0.364 = 485.2\ m^2$ ---------- (B)

Equating equation (A) & (B)

$485.2 \times m^2 = 250$

$m = 0.72$

Selecting standard module, $m = 1.0$

Gear Data:

Number of teeth on gear on main shaft=22

Number of teeth gear on countershaft =26

Module = 1.0 mm

I. Design of spiral bevel gear: Theoretical method.

MaterialSelection:

Ref: - PSG (1.10 & 1.12) + (1.17)

Designation	Ultimate Tensile Strength $\sigma_{ut}(N/mm^2)$	Yield Strength $\sigma_{yt}(N/mm^2)$
EN24	800	680

Table 3 ASME code for design of spiral bevel gear

As Per ASME Code;$\tau_{max} = 108\ N/mm^2$

Check for torsional shear failure:-

$Design\ Torque = T = 0.29 \times 2.78 = 0.81\ Nm$

$$T = \frac{\pi\ \tau_{act}}{16} \times \frac{D_o^4 - D_i^4}{D_o}$$

$$0.81 \times 10^3 = \frac{\pi\ \tau_{act}}{16} \times \frac{24^4 - 15^4}{24}$$

$\tau_{act} = 0.35\ N/mm^2$

As $\tau_{act} < \tau_{max}$, bevel gear is safe under torsional load.

IV. ANALYSIS OF SPIRAL BEVEL GEAR

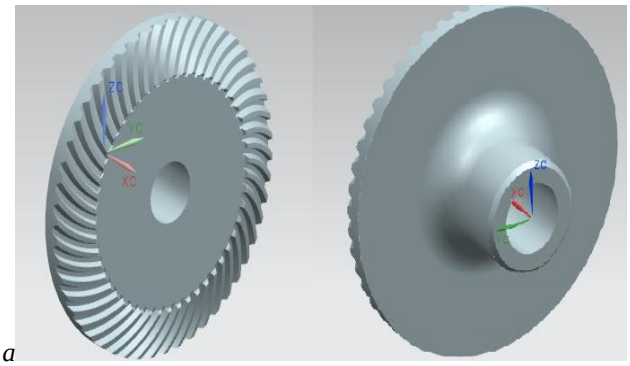

a

Fig. 3:CAD model of spiral bevel gear

Gear Data:

$Number\ of\ teeth = 50$

$Pressure\ angle = 20^0$

$$Ratio\ m_G = \frac{N_g}{N_p} = \frac{50}{18} = 2.78$$

$Gear\ pitch\ angle = 19.8^0$

$Pressure\ angle = 20^0$

$Daimetric\ pitch = 2.3\ mm$

$Face\ Width = 13\ mm$

Measurement Mass Properties

Displayed Mass Property Values

$Volume = 33973.3\ \text{mm}^3$

$Area = 13530.4 mm^2$

$Mass = 0.27\ kg$

$Weight = 2.61\ N$

$Radius\ of\ Gyration = 24.02\ mm$

$Centroid = 21.54, 0.00, 0.00$

$Area = 13530.4\ mm^2$

$Design\ Torque = T = 0.29 \times 2.78 = 0.81\ Nm$

Geometry:

CAD geometry is created using UG Nx software and used for FE analysis in ANSYS.

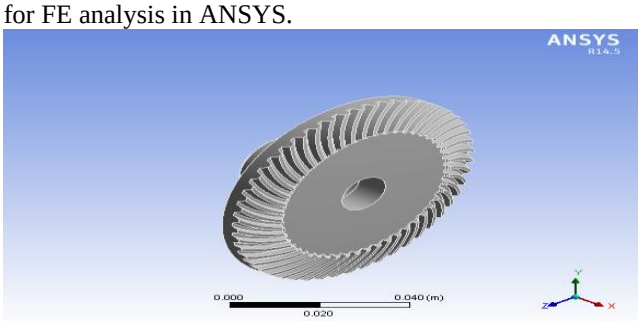

Fig. 4: CAD model of spiral bevel gear imported in ANSYS

FE Model:

FE model is created using ANSYS. Second order tetrahedral elements are used to capture bevel gear geometry for better accuracy. Very fine mesh up to 0.5 mm is used at the gear teeth and root fillet, core of the gear is meshed using coarse element size.

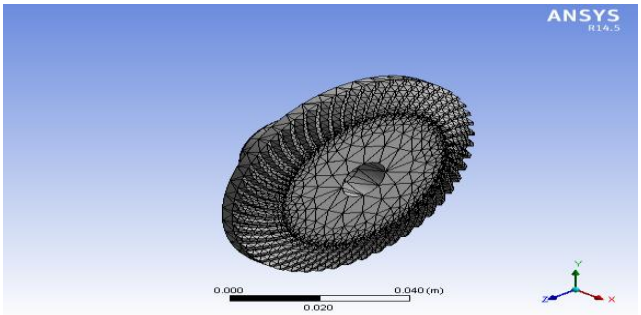

Fig. 5: FE model of spiral bevel gear generated in ANSYS

Boundary Condition:

All translational degrees of freedom and rotation about bevel gear axis is fixed for FE analysis. These are minimum required boundary conditions to get proper convergence of the model.

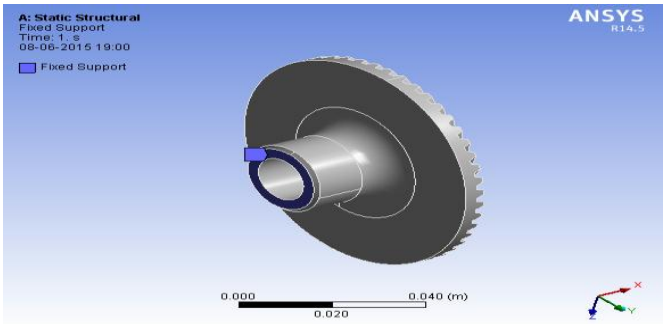

Fig. 6: Application of BCs in ANSYS

Loading

Torque load is applied on the teeth of bevel gear.

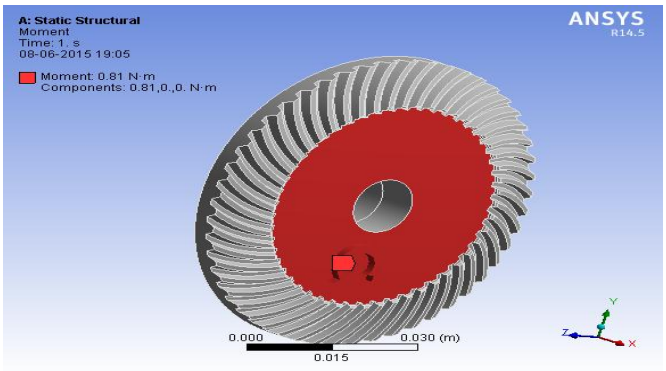

Fig. 7: Torque load application in ANSYS

FE Analysis Results

Equivalent von Mises stress and deformations within gear are plotted. Stress observed in gear is well within acceptable limit.

Maximum stress due to torsional load is observed at the junction of gear and cylindrical part.

There is scope for structural optimization of model, due to time constraint optimization is not considered as part of this work.

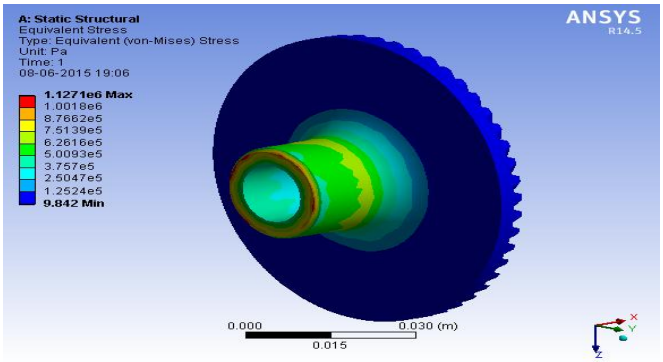

Fig. 8: von Mises stress contour in ANSYS

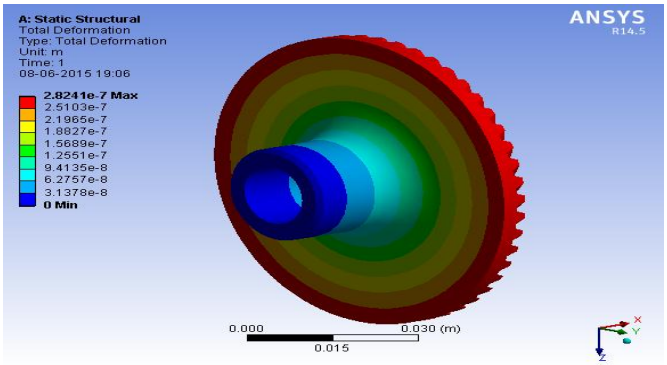

Fig. 9: Deformation contour in ANSYS

1. Maximum stress induced in the gear is 11.271 N/mm^2< allowable stress 108 N/mm^2 the gear is safe.
2. Maximum deformation is 2.82 x 10^{-7} mm

V.CONCLUSION

Dual mode bicycle with shaft drive by using four speed gear box is designed successfully. This bicycle is used for two purposes, travelling and exercise. Design work is accomplished using UG Nx.Critical parts are validated by analytical calculations as well as FEA analysis using ANSYS solver.Physical test and trials are conducted to differentiate the findings of exercising and trek mode.

Theoretical and Analytical results are compared for spiral bevel gear, input shaft and output shaft and found that stresses are within acceptable limit in both cases.

This chainless bicycle with gear box gives maximum efficiency in travel mode and also gives maximum calorie burn in exercise mode.

ACKNOWLEDGEMENT

Our heartfelt thanks go to DGOI Faculty of Engineering, for providing a strong platform to develop our skills and capabilities. I would like to thank to our guide respected teachers for their continuous support and incentive for us. Last but not least, I would like to thanks to all those who directly or indirectly help us in presenting the paper.

REFRENCES

[1] WalterStillman, JR.,“BICYCLE”, US Patent No.456 387, July 21, 1891.

[2] KennethS.Keyes, “Drive Shaft Driven Bicycle” US005078416A, jan.7, 1992

[3] BillieJ.Becoat, “Dual Wheel Driven Bicycle” US005184838A, Feb.9, 199

[4] Yongqiang Huang, Jinhong Zhang, YaocaiOu, Ruan, “Chainless Transmission Mechanism for Bicycle” US006695333B2, Feb. 24, 2004

[5] Samuel O. Smith, “Shaft Driven Bicycle and Transmission” US006827362B2, Dec.7,2004.

[6] Samuel O. Smith, “Shaft Driven Bicycle and Transmission” US20050093267A1, May 5, 200

[7] KristerSpolander, “Better cycle-An analysis of the needs and requirements of older Cyclists” ISBN: 978 91-85959-05-1, VINNOVA –Swedish Governmental Agency.For Innovation System/, Dec.2007

[8] Andrew Brewed, Phillip bonkoski, Henry kohring, chrisLevay, "Chainless Challenge", Dec 15, 2009
[9] S. Vanangamudi, S. Prabhakar, C. Thamotharan and R. Anbazhagan., "Drive Shaft Mechanism in Motor Cycle", DOI: 10.5829/idosi.mejsr.2014.20.12.929.
[10]Rahul U. Urunkar, "Study of Drive Mechanisms of Bicycle, Tricycle or Like Vehicles to Optimize Operating Performance - A Review," ISSN: 2248-9622, Vol. 4, Issue 1(Version 2), January 2014, pp.214-219
[11]M. Rama Narasimha Reddy, Asst-Prof, Sir Vishveswaraiah Institute of Science & Technology (svstm), "Design & Fabrication of Shaft Drive for Bicycle", International Journal of Emerging Engineering Research and Technology Volume 2, Issue 2, May 2014

